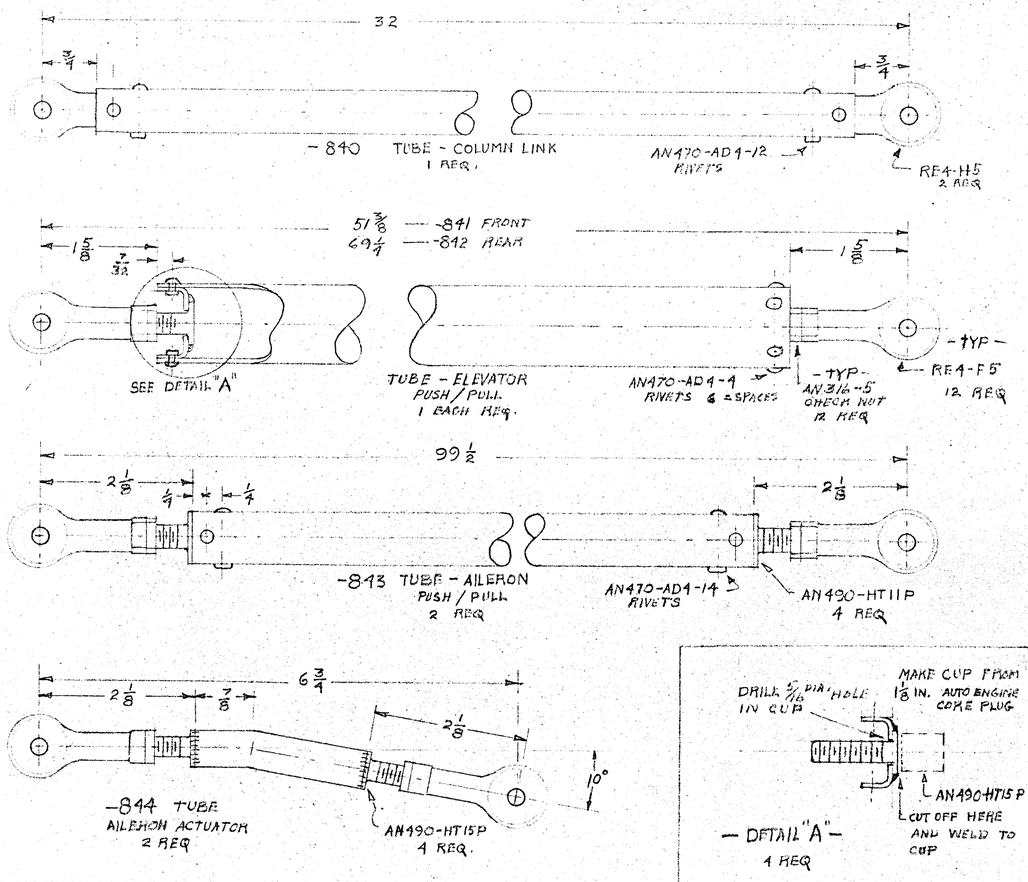

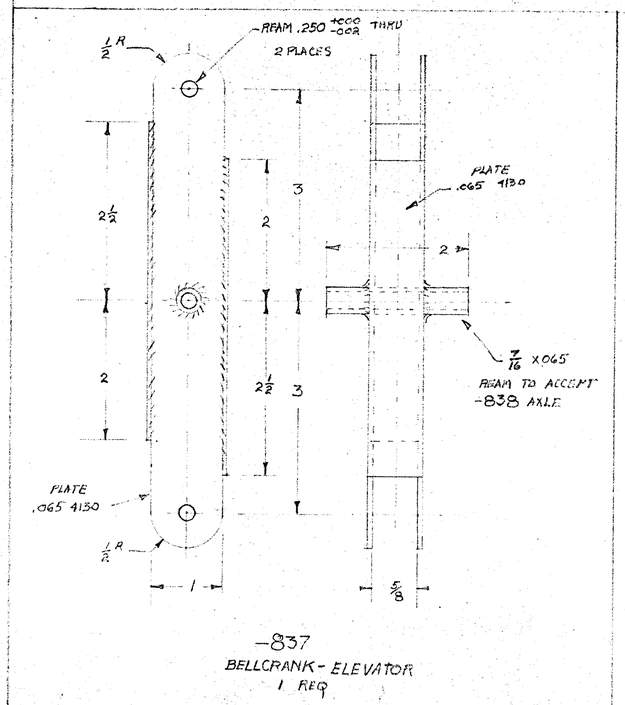

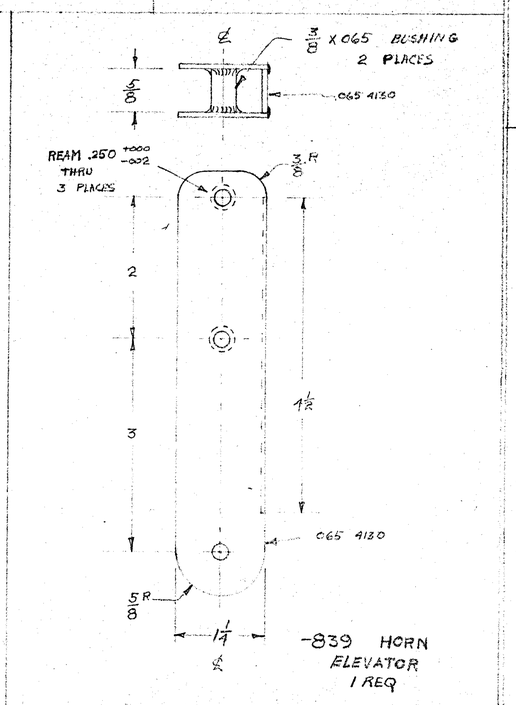

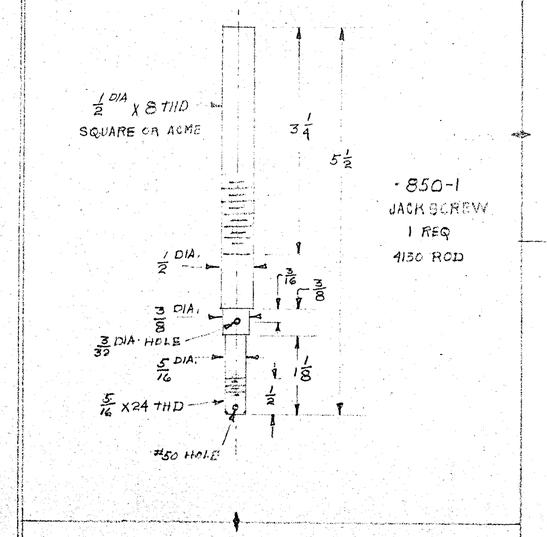

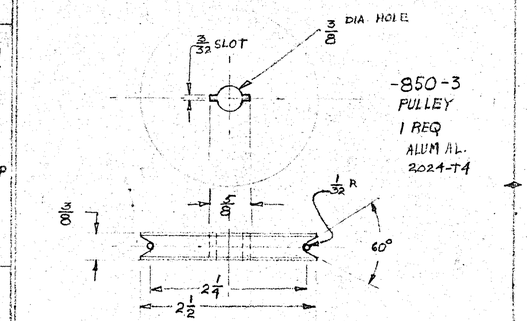

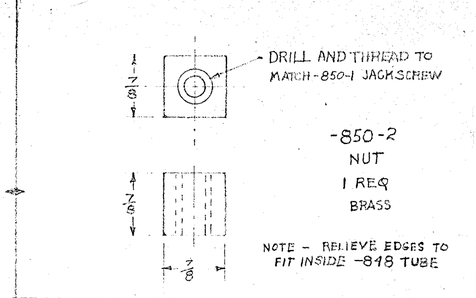

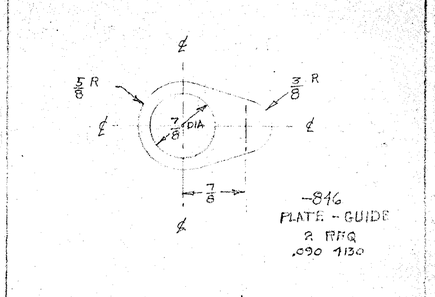

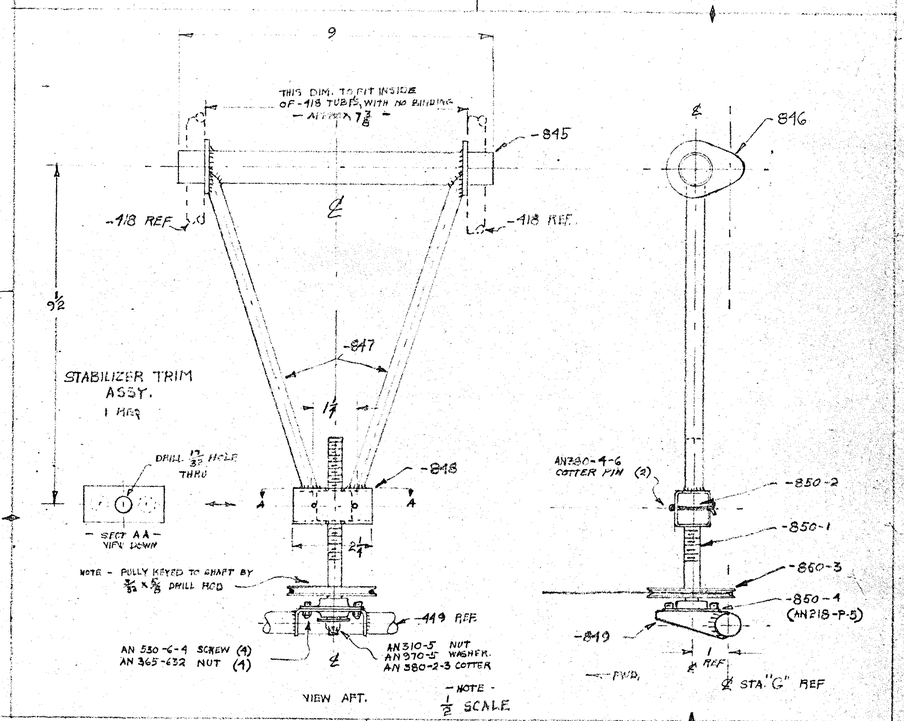

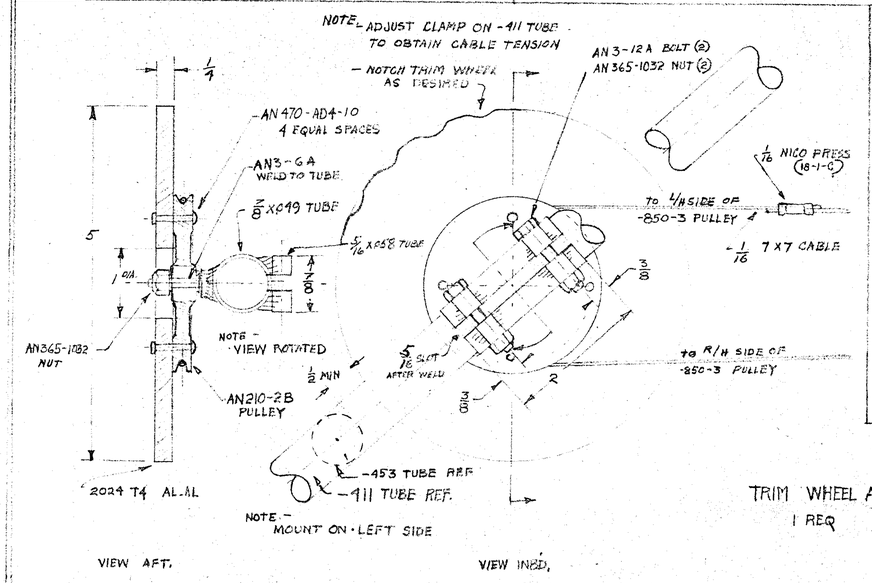

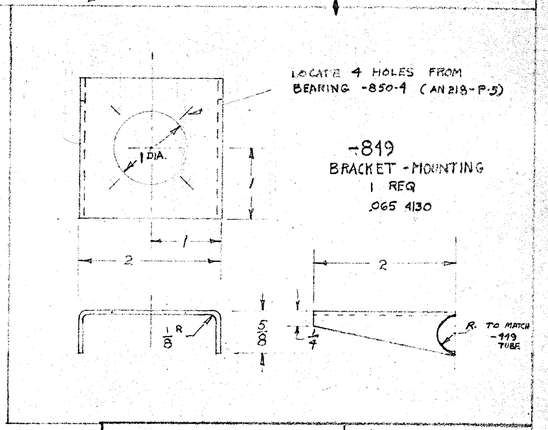

TRIM WHEEL ASSY.
1 REQ

MARQUART "Charger" MA-5			ED MARQUART PO BOX 2082 RIVERSIDE CAL. 92509
DRN.	CW	10-67	CONTROL TUBES AND TRIM SYSTEM
CHK.	EM	2-70	
REV.	CW	7-73	
TR.	EM	11-73	
PRINT SER. NO. 6236		SCALE - FULL & NOTED	SHEET - 19 OF -